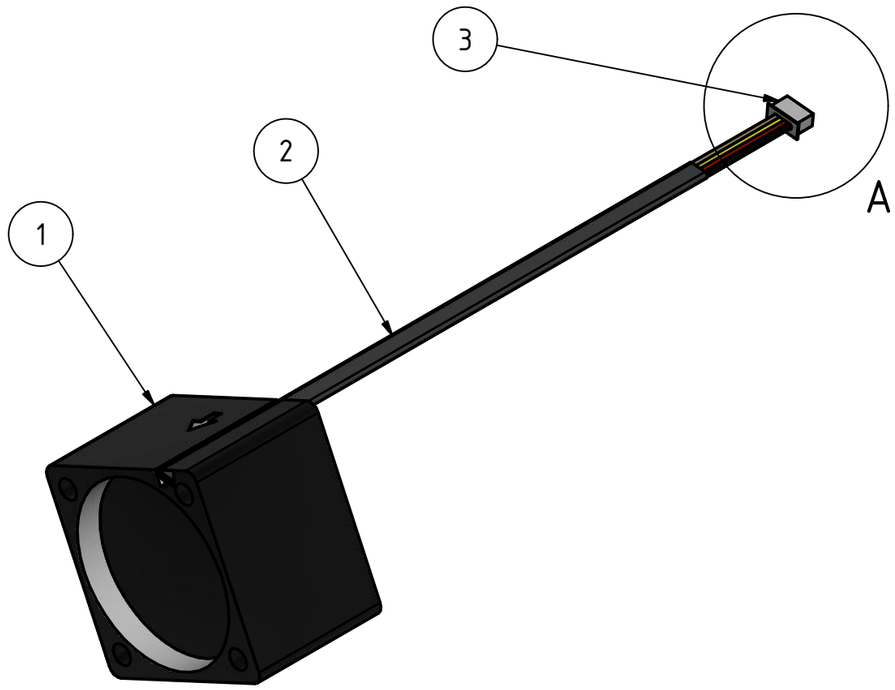

A (5 : 1)

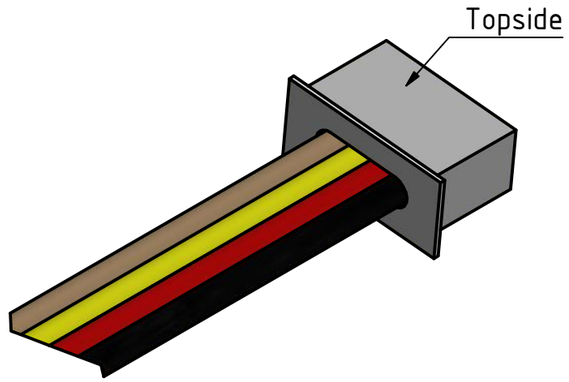

Pay attention to the order of the wire colours!

Length measurements refer to the front of the fan chassis, not throughout.
Shorten wires to determined final length.

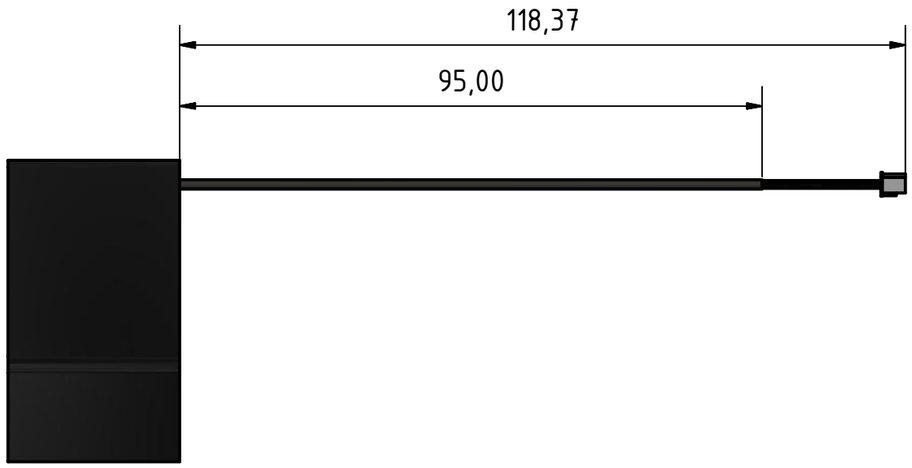

BILL OF COMPONENTS				
OBJECT	QUANTITY	DESCRIPTION	SUPPLIER	REFERENCE NO.
1	1	BLDC FAN 38x38x28mm SanAce 38	Sanyo Denki	9GA0312P3G001
2	1	SHRINKWRAP 3/1mm	RS Components	337635
3	1	4 PIN FEMALE CONNECTOR	Molex	510210400

	Datum	Name
Gezeichnet	10.03.2021	Wernegger
Kontrolliert		
Norm		

Fan assembly

FA100002854

1

A3

Status	Änderungen	Datum	Name